1845 Tech Manual.qxd 23/11/05 1:20 pm Page 2

# EXCELSIOR

## UNVENTED WATER HEATERS

## INSTALLATION MANUAL

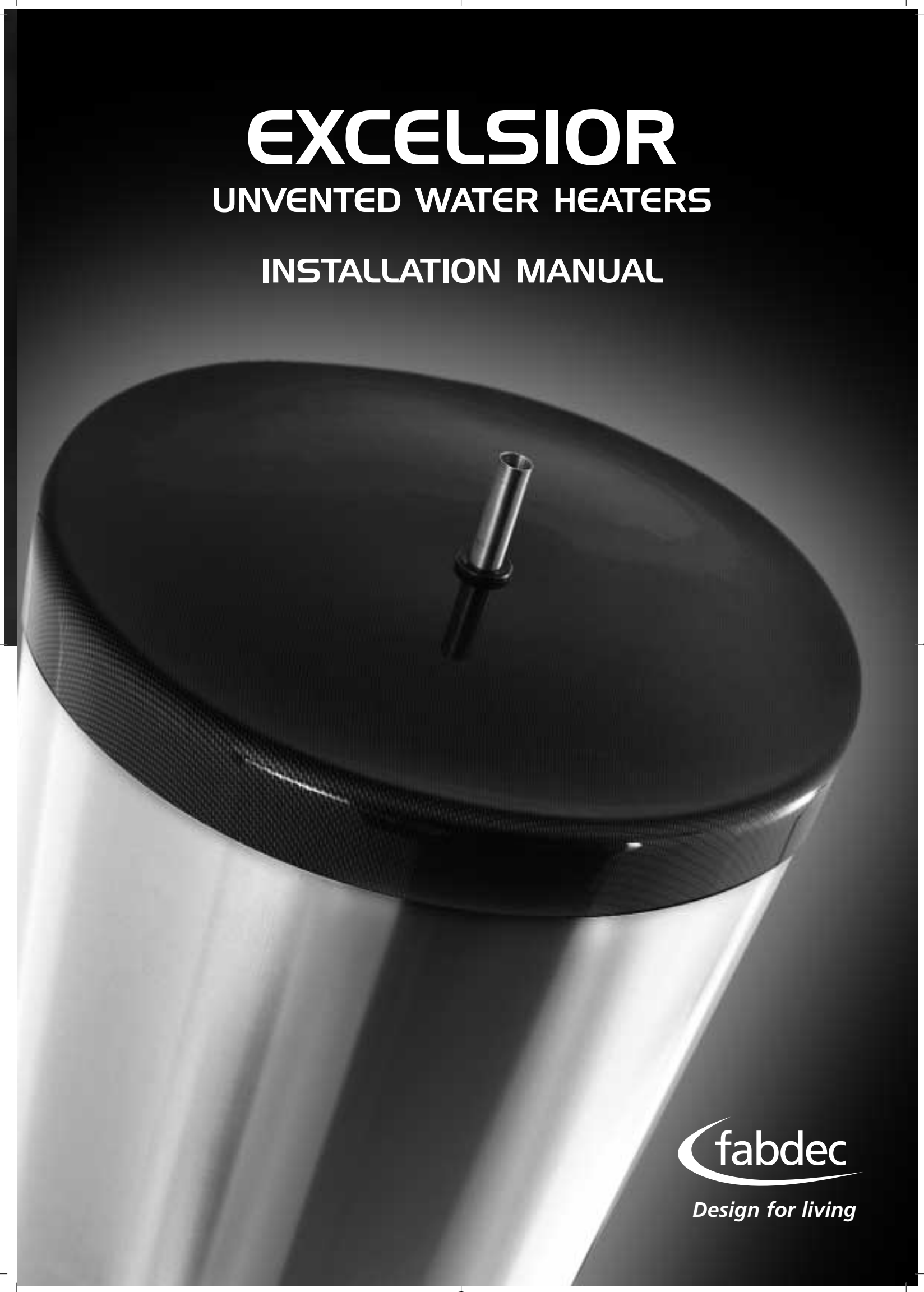

fabdec

*Design for living*

1845 Tech Manual.qxd 23/11/05 1:21 pm Page 3

## TECHNICAL DATA & INSTALLATION INSTRUCTIONS FOR EXCELSIOR DIRECT & INDIRECT UNVENTED WATER HEATERS WITH EXTERNAL EXPANSION TANK

Fabdec Ltd is one of the worlds leading unvented water heater manufacturers.

Your water heater is made from Duplex Stainless Steel, which is one of the toughest and best grades of steel currently available.

Each unit has been individually tested and inspected to industry standard.

Your water heater uses advances in technology and innovative techniques to provide you with a high performance water heater at the best price possible.

No other type of water heater can provide all of the benefits that can be achieved from unvented units such as the **Excelsior Unvented Water Heater**.

## IMPORTANT NOTICE FOR INSTALLATION

**READ THESE INSTALLATION AND MAINTENANCE INSTRUCTIONS BEFORE COMMENCING**

UNVENTED CYLINDERS ARE DESIGNED TO BS STANDARD AND INSTALLED TO RELEVANT BUILDING REGULATIONS

THE RELEVANT REGULATIONS ARE

ENGLAND & WALES – BUILDING REGULATION G3

SCOTLAND – TECHNICAL STANDARD P3

NORTHERN IRELAND – BUILDING REGULATION P5

AFTER INSTALLATION THE BENCHMARK LOG BOOK MUST BE COMPLETED AND LEFT ALONG WITH THESE INSTRUCTIONS WITH THE HOUSEHOLDER FOR FUTURE REFERENCE.

**INSTALLATION INSTRUCTION MANUAL TO BE LEFT WITH THE UNIT**

## INSTALLATION INSTRUCTIONS


| | |
|---|---|
| Siting the **Excelsior** Unit | p4 |
| Check water pressure & flow rates | p4 |
| Connecting the water supply | p5 |
| Cold water valve | p5 |
| Drain tap | p5 |
| Pipework to taps | p5 |
| Secondary circulation | p5 |
| Wiring | p7 |
| Fitting immersion heaters | p7 |
| Fitting the thermal cut out & primary connections | p7 |
| Tundish | p8 |
| Commissioning the **Excelsior** Unit | p8 |
| External expansion tank | p8 |
| Scale | p8 |
| Draining | p8 |
| Discharge pipework | p8 |
| G3 Requirement | p9 |
| Problem solving | p10 |
| Spares | p10 |
| Part component references | p10 |
| Guarantee | p11 |


## CONTENTS

### SPECIFIERS GUIDE


| | |
|---|---|
| The law and unvented | p3 |
| The benefits of unvented systems | p3 |
| The benefits of **Excelsior** Unvented Water Heaters | p3 |
| Standard energy losses | p4 |
| What is supplied with **Excelsior**? | p4 |


### DIAGRAMS


| | |
|---|---|
| Dimensional data for DH / IDH range of water heaters | p3 |
| Typical installation of a DH tank | p5 |
| Typical installation of a IDH tank | p5 |
| Secondary circulation connection | p6 |
| 2 x 2 port (S-plan) valve system | p6 |
| 2 port valve + 3 port mid position valve (y-plan) | p7 |
| Immersion heater | p7 |
| Schematic discharge pipe arrangement | p8 |

1845 Tech Manual.qxd 23/11/05 1:21 pm Page 4

# EXCELSIOR WATER HEATER SPECIFIERS GUIDE

## THE LAW AND UNVENTED

It is legal to fit an Unvented Unit into any property. UK water byelaws were amended to allow this change. There is no longer a requirement to have an old-fashioned "Tank-in-the-Roof" system.

## THE BENEFITS OF UNVENTED SYSTEMS

- A real Power Shower without a noisy pump
- No tanks in the roof – no ballcocks to jam or leak – no noise from tank filling
- All your water – hot and cold – is direct from the mains
- Site the **Excelsior** unvented water heater wherever convenient
- **Excelsior** fills your bath in minutes and will run two at the same time (subject to good plumbing and flow rates)
- The **Excelsior** unit works off electricity (economy 7) or any oil or gas fired boiler (not suitable for solid fuel boilers)

## THE BENEFITS OF EXCELSIOR UNVENTED WATER HEATERS

- Expansion vessel supplied
- Annual inspection as per warranty
- Duplex Stainless Steel
- Operates at 3bar, which is higher than some other unvented units
- High quality finish
- Has one of the lowest heat losses for maximum economy
- No sacrificial anode - low maintenance

### Indirect Heat Exterior Reference Dimensions

| Reference Volumes litres | Tank Height mm | Overall Height mm | P&T Valve mm | Bottom Heater mm | Top Coil mm | Bottom Coil mm | Temp Monitor mm | Water In mm | Top Heater mm |
|---|---|---|---|---|---|---|---|---|---|
| 80 | 636 | 681 | 347 | 188 | N/A | 283 | 233 | 230 | N/A |
| 130 | 928 | 973 | 618 | 188 | 558 | 483 | 357 | 230 | 521 |
| 150 | 1056 | 1101 | 737 | 188 | 558 | 483 | 357 | 230 | 640 |
| 175 | 1213 | 1258 | 883 | 188 | 758 | 683 | 458 | 230 | 786 |
| 215 | 1455 | 1500 | 1108 | 188 | 758 | 683 | 507 | 230 | 1011 |
| 255 | 1723 | 1768 | 1356 | 188 | 758 | 683 | 608 | 230 | 1259 |
| 305 | 1999 | 2044 | 1613 | 188 | 758 | 683 | 608 | 230 | 1516 |

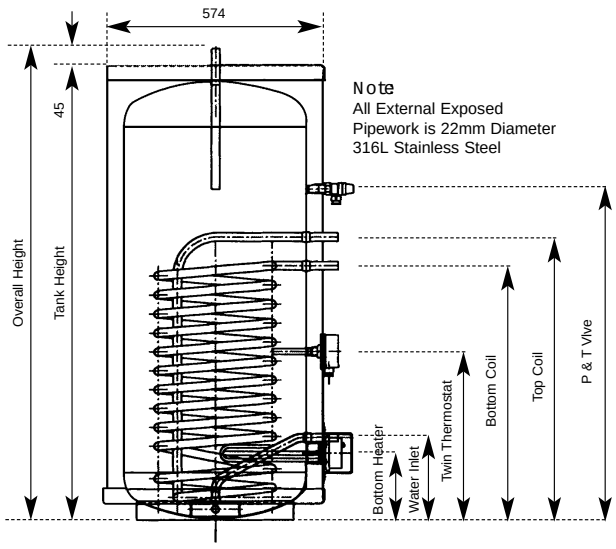


### Direct Heat Exterior Reference Dimensions

| Reference Volumes litres | Tank Height mm | Overall Height mm | P&T Valve mm | Top Heater mm | Bottom Heater mm | Water In mm |
|---|---|---|---|---|---|---|
| 80 | 636 | 694 | 347 | N/A | 250 | 230 |
| 130 | 928 | 986 | 618 | 521 | 188 | 230 |
| 150 | 1056 | 1114 | 737 | 640 | 188 | 230 |
| 175 | 1213 | 1271 | 883 | 786 | 188 | 230 |
| 215 | 1455 | 1513 | 1108 | 1011 | 188 | 230 |
| 255 | 1723 | 1781 | 1356 | 1259 | 188 | 230 |
| 305 | 1999 | 2057 | 1613 | 1516 | 188 | 230 |

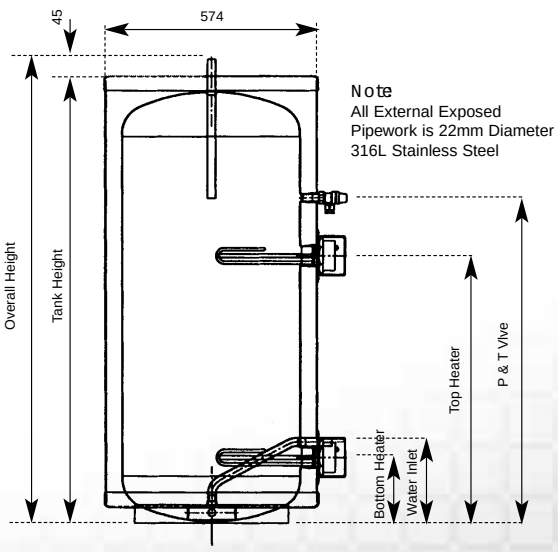


**Dimensional data for Indirect Heat/Direct Heat range of water heaters**

1845 Tech Manual.qxd 23/11/05 1:22 pm Page 5

## STANDARD ENERGY LOSSES

The heat loss of each **Excelsior** Unvented Unit while maintaining the temperature of the stored water at 65 degrees Celsius. (See performance table below).

1) Tests carried out by BBA. Slight variations may occur with changes to water mains supply pressure

**Excelsior Performance**

| Nominal Capacity Litres | Heat up Model IDH Mins | Heat up Model DH Mins | Reheat Model IDH Mins | Reheat Model DH Mins | Heat loss in 24 hrs kw/hr |
|---|---|---|---|---|---|
| 80 | 33 | 64 | 23 | 53 | 1.12 |
| 130 | 28 | 115 | 21 | 90 | 1.50 |
| 150 | 33 | 138 | 24 | 104 | 1.82 |
| 175 | 27 | 167 | 24 | 124 | 2.10 |
| 215 | 35 | 212 | 30 | 153 | 2.64 |
| 255 | 42 | 263 | 35 | 184 | 2.73 |
| 305 | 50 | 313 | 42 | 220 | 2.88 |

2) These figures relate to a 45 degree differential between the stored water and ambient temperature

## WITH AN EXCELSIOR UNVENTED CYLINDER THE FOLLOWING IS SUPPLIED AS STANDARD

Before commencing installation check that all the components of your **Excelsior** Unit are contained in the kit.

- 3KW Incoloy 825 heating element-incorporating thermostat to 70 degrees Celsius and resetable safety cut out set at 80 degrees Celsius
- 1 Element on IDH indirect models up to 305 litres and 80 litre DH direct model
- 2 Elements on DH direct models from 130 up to 305 litres. Additional elements from 215 to 305 litres are available on request.
- Cold-water control valve comprising line strainer, check valve, pressure reducing valve set to 3 bar
- Expansion relief valve with non return valve set at 6 bar
- Tundish 15mm x 22mm F x F
- Temperature / Pressure relief valve set at 90 degrees Celsius and 7 bar pressure relief (factory fitted)
- Motorised valve (indirect units only)
- Cylinder thermostat-factory fitted to cylinder, maximum setting 85 degrees Celsius (indirect units only)
- Thermal cut out set to operate at 87 degrees Celsius plus or minus 3 degrees (indirect units only)
- Expansion vessel capacity ranges as shown in the table below: -

| Tank Size | Expansion Tank Required |
|---|---|
| 80 to 130 Litres | 12 Litres |
| 150 to 215 Litres | 18 Litres |
| 255 to 305 Litres | 25 Litres |

# EXCELSIOR UNVENTED INSTALLATION INSTRUCTIONS

**WARNING**: Under no circumstances must the factory fitted temperature pressure relief valve be removed. This will totally invalidate any guarantee or claim. The cold-water inlet valve assembly must be fitted or the **Excelsior** unit will not perform satisfactorily.

**DO NOT ATTEMPT TO VENT THE PRIMARY CIRCUIT THROUGH THE EXCELSIOR UNIT.**

All boilers should be installed to manufacturers instructions and the primary circuit through the **Excelsior** unit must be pumped.

## SITING THE EXCELSIOR UNIT

The unit can be placed anywhere convenient. Because it is connected directly to the mains water supply it is equally efficient on any floor – ground, first or second. Avoid areas that may be subject to frost. Try to keep pipe runs as short as possible for maximum economy, especially hot water discharge pipes running down from the **Excelsior** unit.

The unit can be fitted into a conventional airing cupboard and does not require any additional insulation.

**ALL EXCELSIOR UNITS MUST BE STORED VERTICALLY**

## CHECK WATER PRESSURE & FLOW RATES

We suggest 1.5 bar pressure & 15 litres / minute flow rate to be the minimum requirements for satisfactory operation. Less than this the unit will still operate but you will not be able to run two, or more, outlets at the same time. 85% of all U.K homes have more than 2-bar pressure.

The mains supply must not exceed 16 bar. If it does a special pressure-reducing valve will be required.

**Important Note**: - Stainless Steel Tectile push fit elbows are fitted as standard to all **Excelsior** Cylinders.

1845 Tech Manual.qxd 23/11/05 1:22 pm Page 6

## CONNECTING THE WATER SUPPLY

- Pipework is not supplied
- All pipework should be installed using good plumbing practice. We recommend 22mm mains cold water supply is used.
- Install a Stop Cock Valve before the cold water inlet assembly on the incoming mains water supply so the unit can be isolated if required.

## COLD WATER VALVE

The combined cold water valve (supplied) can be connected anywhere on the cold water mains prior to the unit. It can even be located at a point near to where the mains supply enters the premises if this is more convenient. When installing the cold water valve, ensure that the arrow is pointing in the same direction as the mains water supply flow when connecting, see fig 2.

The cold water balancing port, on the valve, allows you to connect the cold water mains to the rest of the property thus giving balanced pressure throughout. If this facility is not required leave the cap on.

## DRAIN TAP

A drain tap to drain the unit must be fitted to the cold-water inlet pipe somewhere between the **Excelsior** unit and the cold water valve assembly and at as low a level as possible, see fig. 1.

## PIPEWORK TO TAPS

Ideally a 22mm pipe run should supply the outlets throughout the property with short lengths (max 1 metre) runs of 15mm going to baths, showers, and basin taps. Smaller bore pipe can be used to suit taps.

## SECONDARY CIRCULATION

This is particularly easy to fit on the **Excelsior** units; a Swept Tee (not supplied) is needed for all indirect models if secondary circulation is required, see page 6 fig. 3 for fitting. A non-return valve (not supplied) must be fitted to prevent backflow. You will need a pump to circulate the hot water (not supplied). The return feed is in 15mm pipe and all work can be done on site.

Typical Indirect Tank installation using external expansion vessel

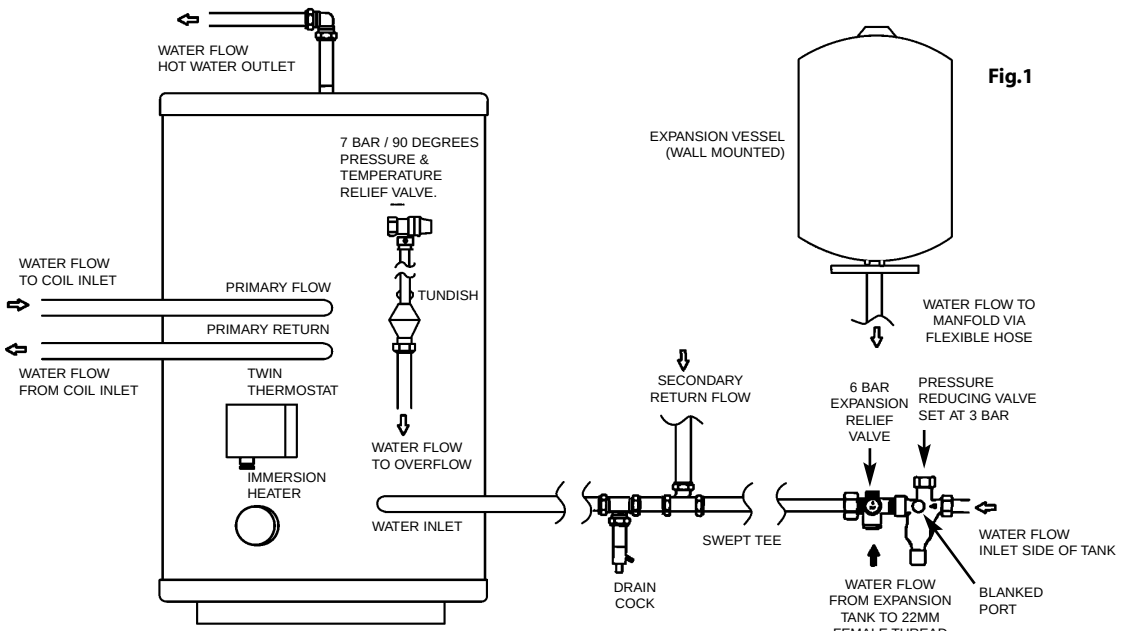


**Fig.1**

Cold water inlet valve assembly

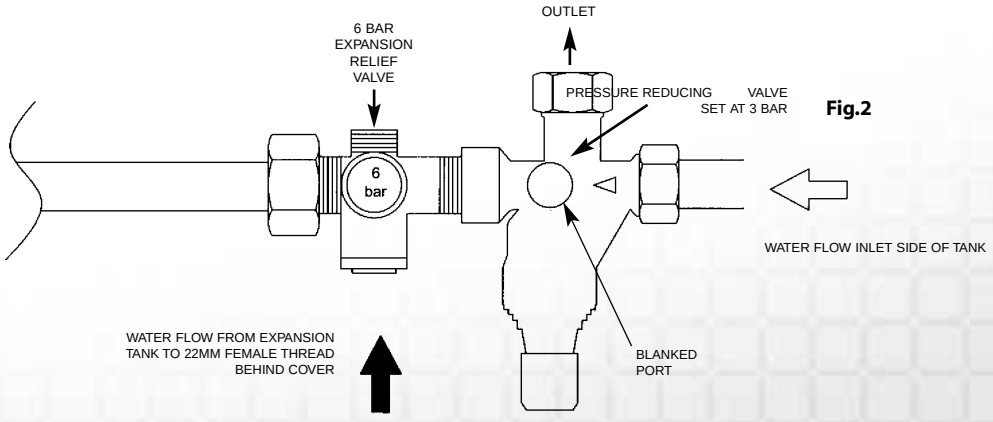


**Fig.2**

1845 Tech Manual.qxd 23/11/05 1:23 pm Page 7

**SECONDARY CIRCULATION CONNECTION DIAGRAM**

**Fig.3**

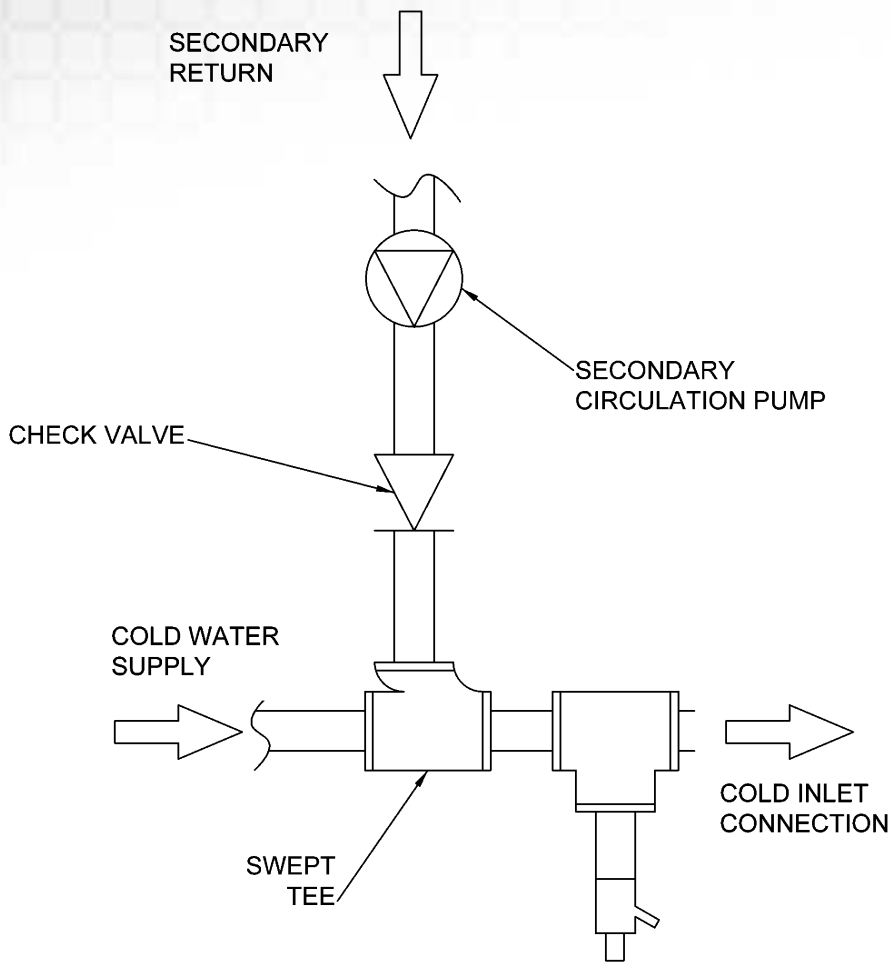


**2 * 2 PORT (S-PLAN) VALVE SYSTEM GUIDANCE LAYOUT ONLY**

**Fig.4**

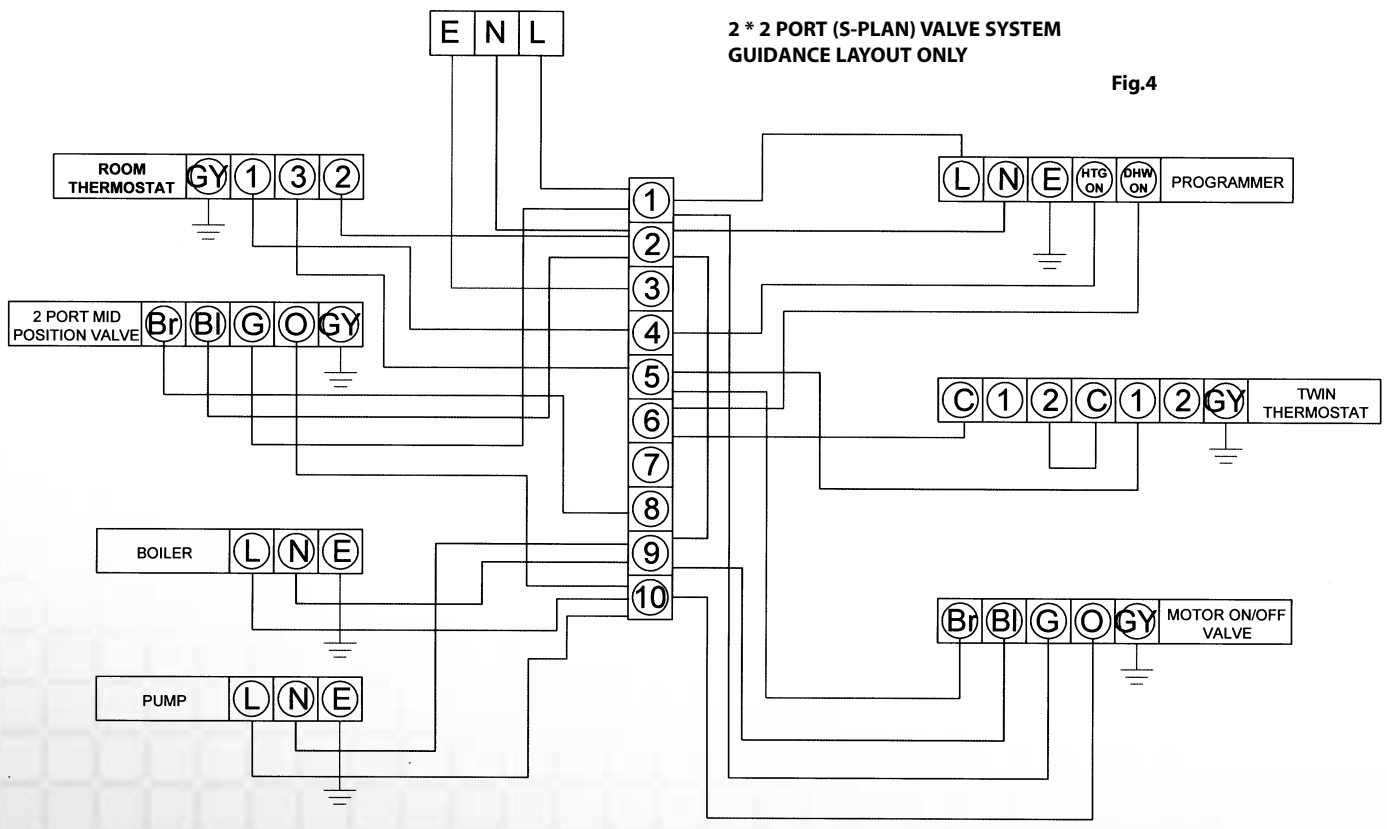

1845 Tech Manual.qxd 23/11/05 1:23 pm Page 8

**2 PORT VALVE + 3 PORT MID POSITION VALVE (Y-PLAN) SYSTEM GUIDANCE LAYOUT ONLY**

**Fig.5**

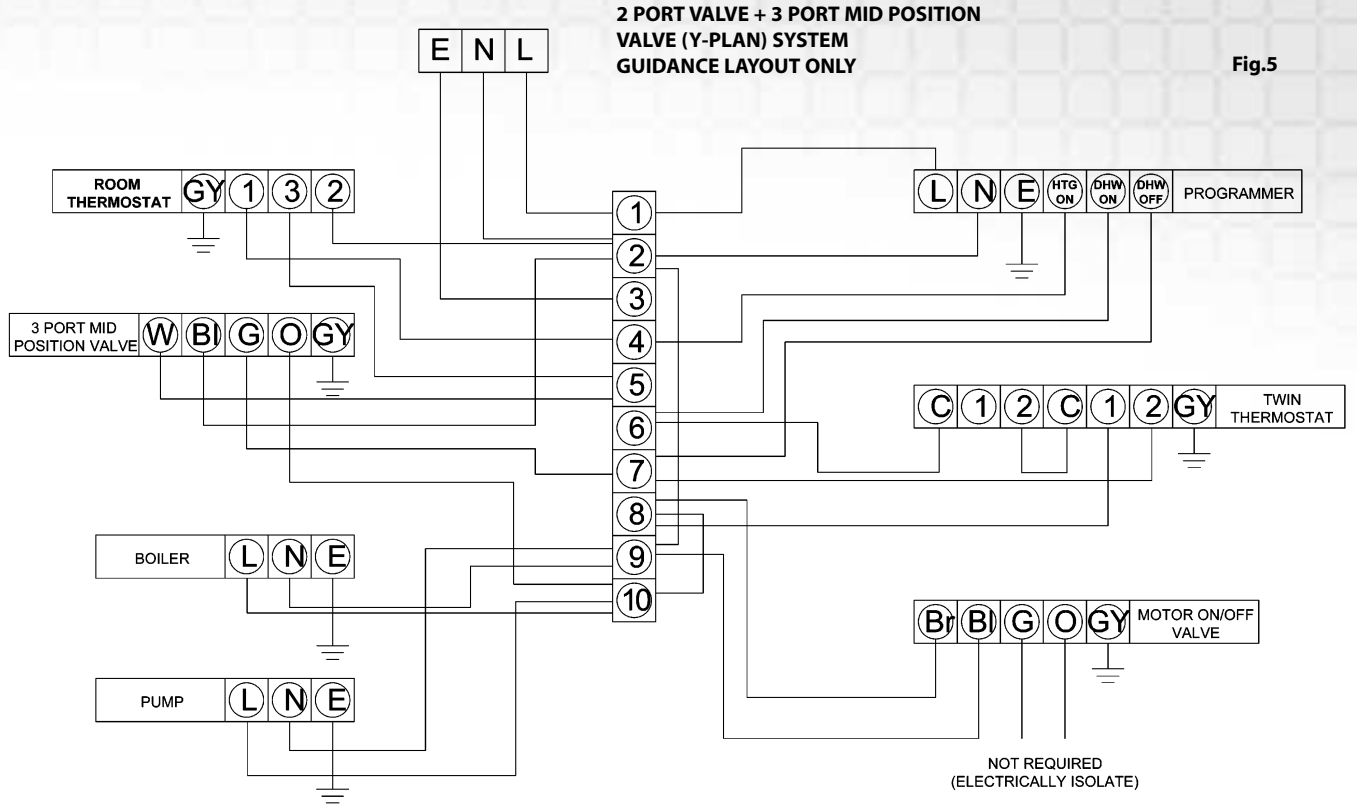


## WIRING

All electrical wiring should be carried out by a registered electrical contractor and must conform to the latest IEE wiring regulations

Do not switch the power on until the unit has been filled with water and all wiring has been earthed, see Fig. 4 and 5.

## FITTING IMMERSION HEATERS

These are supplied as standard

An 'O' ring is supplied as the seal and must be fitted against the flange of the element. Take care not to cross thread and DO NOT USE any other type of seal.

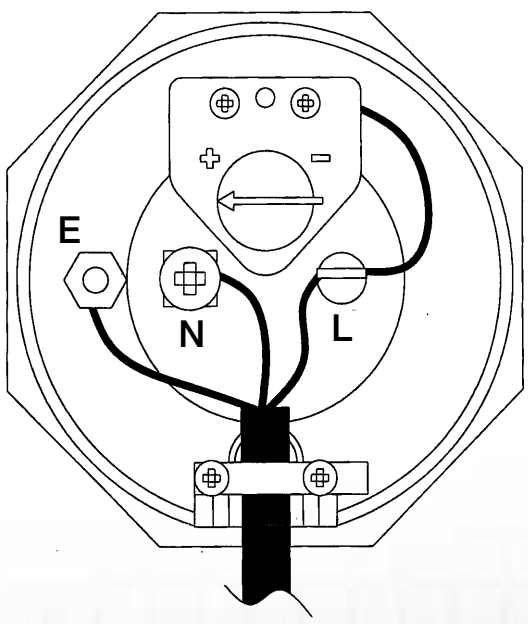


As our heating element is Incoloy 825 and is fitted with a cut-out and thermostat for safety, a non-standard $1\frac{3}{4}$" boss is fitted to the unit. Replacements can only be obtained from your authorised dealer or Fabdec Ltd.

All our heating elements have a built in manual reset cut-out. This will operate if the immersion heater thermostat fails.

**WARNING**: Ensure that the immersion heater thermostat is set at 60 degrees Celsius.

## FITTING THE THERMAL CUT-OUT & PRIMARY CONNECTIONS

The motorised valve supplied and the thermal cut-out (Hi limit stat) must be fitted to the primary flow. Use compression fittings only.

Operation of the cut-out and motorised valve

To comply with BBA regulations and to prevent the temperature reaching 100 degrees Celsius the thermal cut-out supplied must be fitted.

The thermal cut-out is wired in series to the cylinder thermostat. When the thermal cut-out senses an abnormal rise in temperature in the primary flow the electrical supply to the motorised valve will be cut, and the valve will be in the closed position thus cutting of the primary water from the boiler to the indirect coil in the cylinder. If this occurs it must be reset manually. If the thermal cut-out operates check the cylinder stat and / or boiler stat.

1845 Tech Manual.qxd 23/11/05 1:24 pm Page 9

## TUNDISH

The tundish supplied must be fitted visible to the occupier. The discharge pipe must be 22mm copper pipe. Regulations do not permit more than 3 x 90-degree bends between the **Excelsior** unit and the outflow. Between the temperature & pressure relief valve and the first 90-degree bend there must be a fall of at least 300mm. The fall of the pipework must be continuous and the pipe should terminate in the gully or be bent backwards onto an outside wall, in a place where discharge cannot be injurious to persons.

If you need to site the **Excelsior** unit In the middle of the house your discharge pipe to the tundish can be as far away as 9m, which in most cases is enough to run the final discharge point. After 9m, increase the pipe size to a greater diameter than 22mm and accordingly for subsequent 9m lengths, see table 1 on page 10.

## COMMISSIONING THE EXCELSIOR UNIT

Switch on electricity to the immersion heater(s) (Direct system) or switch on the boiler (Indirect system). Refer to the boiler manufacturers instructions on commissioning.

Bring the unit to its maximum temperature setting of approx. 60 degrees Celsius. You should, on operating the water taps, have a good flow of hot and cold water assuming adequate water is supplied to the **Excelsior** unit.

Check the water does not discharge via the tundish pipework during heating.

Recheck all fittings/joints for possible leaks.

On completion of the installation, before turning on the mains water supply ensure that all residual materials are removed by means of flushing the system with a "fernox" type cleaner or equivalent.

## EXTERNAL EXPANSION TANK

This smaller tank is connected to the cold-water inlet side of the vessel. Mount the tank according to separate manufacturers instructions provided with the External Expansion Tank.
See fig 1 page 5.

## SCALE

In hard water areas lower water temperatures can result in less scale being deposited.

If water softener is used it should be capable of flows of approx. 50 lt/min, this will maintain maximum performance of the **Excelsior** unit.

If no descaler or softener is used then the heating element(s) will need descaling periodically for maximum efficiency.

## DRAINING

Switch off electrical power to immersion heaters and/or shut down the boiler. Close the stopcock valve to isolate the **Excelsior** unit.

Attach hosepipe to the drain cock having sufficient length to take water to a suitable discharge point.

Open drain cock

Open hot water tap nearest **Excelsior** unit.

If water fails to drain from **Excelsior** unit, vent the system by opening the temperature pressure relief valve.

**SCHEMATIC DISCHARGE PIPE ARRANGEMENT**

**Fig.6**

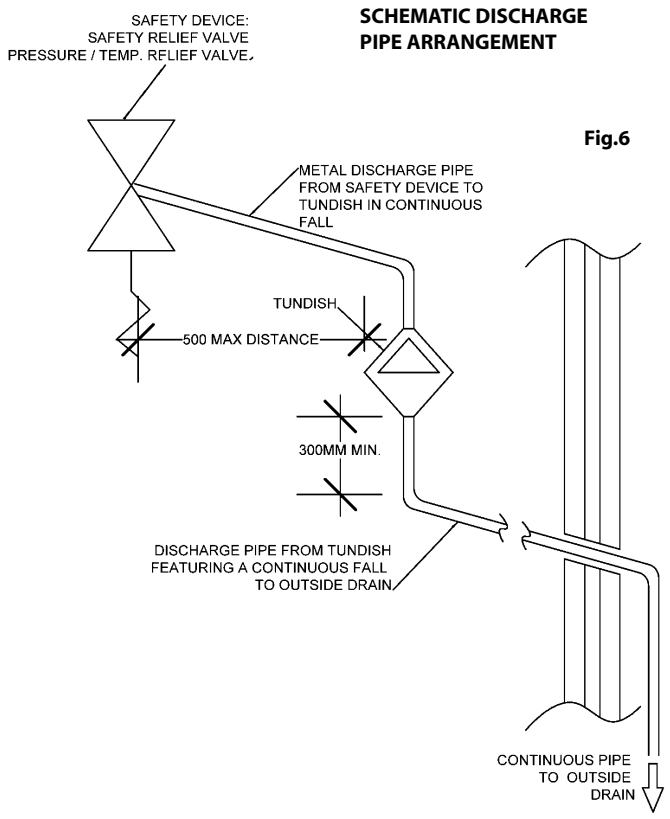


## DISCHARGE PIPEWORK

It is a requirement of Building Regulations that any discharge from an unvented system is conveyed to where it is visible, but will not cause danger to persons in or about the building. The tundish and discharge pipes should be fitted in accordance with the requirements and guidance notes of Building Regulations. Building Regulation G3 Requirements and guidance section 3.9 reproduced in the following sections.

Information Sheet No. 33 available from the British Board of Agreement gives further advice on discharge pipe installation. For discharge pipe arrangements not covered by G3 Guidance or BBA Info Sheet No. 33 advice should be sought from either your local Building Control Officer or Fabdec Ltd.

1845 Tech Manual.qxd 23/11/05 1:24 pm Page 10

## G3 REQUIREMENT

'…there shall be precautions…to ensure that the hot water discharged from safety devices is safely conveyed to where it is visible but will not cause danger to persons in or about the building.'

## G3 GUIDANCE SECTION 3.9

The discharge pipe (D1) from the vessel up to and including tundish is generally supplied by the manufacturer of the hot water storage system. Where otherwise the installation should include the discharge pipe (s) (D1) from the safety device(s). In either case the tundish should be vertical located in the same space as the unvented hot water storage system and be fitted as close as possible and within 500mm of the safety device e.g the temperature relief valve.

The discharge pipe (D2) from the tundish should terminate in a safe place where there is no risk to persons in the vicinity of the discharge, preferably be of metal and:

a. be at least one pipe size larger than the nominal outlet size of the safety device unless it's total equivalent hydraulic resistance exceeds that of a straight pipe 9m long ie. discharge pipes between 9m and 18m equivalent resistance length should be at least two sizes larger, than the nominal outlet size of the safety device between 18 and 27m, at least 3 sizes larger and so on. Bends must be taken into account in calculating flow resistance. Refer to Table 1 overleaf and fig. 6.

   An alternative approach to sizing discharge pipes would be to follow BS 6700:1987 specification for design installation, testing and maintenance of services supplying water for domestic use within buildings and their curtilages, Appendix E, section E2 and table 21.

b. have a vertical section of pipe at least 300mm long, below the tundish before any elbow or bends in the pipework.

c. be installed with a continuous fall.

d. have discharges visible at both the tundish and the final point of discharge but where this is not possible or is practically difficult there should be clear visibility at one or other of these locations.

Examples of acceptable discharge arrangements are:

i) ideally below a fixed grating and above the water seal in a trapped gully.

ii) downward discharges at low level; i.e. up to 100mm above the external surfaces such as car parks, hard standings, grassed areas etc. are acceptable providing that where children may play or otherwise come into contact with discharges a wire cage or similar guard is positioned to prevent contact, whilst maintaining visibility.

iii) discharges at high level; e.g into a metal hopper and metal down pipe with the end of the discharge pipe clearly visible (tundish visible or not) or onto a roof capable of withstanding high temperature discharges of water and 3m from any plastics guttering system that would collect such discharges (tundish visible.)

iv) where a single pipe serves a number of discharges, such as in blocks of flats, the number served should be limited to not more than 6 systems so that any installation discharging can be traced reasonably easily. The single common discharge pipe should be at least one pipe size larger than the largest individual discharge pipe (D2) to be connected. If unvented hot water storage systems are installed where discharges from safety devices may not be apparent i.e. in dwellings occupied by blind, infirm or disabled people, consideration should be given to the installation of an electronically operated device to warn when discharge takes place.

**Note:** The discharge will consist of scalding water and steam. Asphalt, roofing felt and non-metallic rainwater goods may be damaged by such discharges.

## WORKED EXAMPLE OF DISCHARGE PIPE SIZING

The example below is for a G1/2 temperature relief valve with a discharge pipe (D2) having 4 No elbows and length of 7m from the tundish to the point of discharge.

**From table 1:** (overleaf)

Maximum resistance allowed for a straight length of 22mm copper discharge pipe (D2) from G1/2 temperature relief valve is 9.0m

Subtract the resistance for 4 No 22mm elbows at 0.8m each = 3.2m

Therefore the permitted length equates to 5.8m

5.8m is less than the actual length of 7m therefore calculate the next largest size.

Maximum resistance allowed for a straight length of 28mm pipe (D2) from a G1/2 temperature relief valve equates to 18m

Subtract the resistance of 4 No 28mm elbows at 1.0m each = 4.0m

Therefore the maximum permitted length equates to 14m

As the actual length is 7m a 28mm (D2) copper pipe will be satisfactory.

1845 Tech Manual.qxd 23/11/05 1:26 pm Page 11

## TABLE 1 – SIZING OF COPPER DISCHARGE PIPE (D2) FOR COMMON T&P RELIEF VALVE SIZES

| Valve outlet Size | Minimum size of discharge pipe D1 | Minimum size of discharge pipe D2 from tundish | Maximum resistance allowed, expressed as a length of straight pipe (i.e. no elbows or bends) | Resistance created by each elbow or bend |
|---|---|---|---|---|
| G1/2 | 15mm | 22mm | up to 9m | 0.8m |
| | | 28mm | up to 18m | 1.0m |
| | | 35mm | up to 27m | 1.4m |
| G3/4 | 22mm | 28mm | up to 9m | 1.0m |
| | | 35mm | up to 18m | 1.4m |
| | | 42mm | up to 27m | 1.7m |
| G1 | 28mm | 35mm | up to 9m | 1.4m |
| | | 42mm | up to 18m | 1.7m |
| | | 54mm | up to 27m | 2.3m |

## PROBLEM SOLVING

**No water in tap from the Excelsior Unit**

Check that mains supply is on.

Check that the line strainer is not blocked

Check that the combination valve has been fitted so that the arrow on it faces in the direction of the water flow.

**If the water at the hot tap is cold**

Boiler (indirect): Ensure that the boiler has been switched on and working correctly.

Check that no air blocks have occurred in the primary system

Check the following are all connected correctly

Cylinder Stat

Thermal cut out (Reset by pushing red button)

Motorised valve

Boiler thermostat (max setting 82 degrees Celsius)

Boiler thermal cut out (if fitted)(Reset by pushing red button)

**Direct (Electric) Models**

**WARNING**: Isolate unit at main electric supply before opening heating element cover.

Ensure that power is available to the element from the electric mains and that the isolator is on. If there is power to the element and the element fails to operate check as follows:

Check that the thermal cut out on the elements have not operated. If they have, reset by pressing the red button. If they cut out again as the water heats up the cylinder thermostat has failed and needs replacing. Fit a new thermostat and reset the thermal cut out.

With power on and the thermal cut out reset check the output terminal on the thermostat. If the circuit cannot be completed, the thermostat and/or cut out needs replacing.

Check current amps drawn by the heater, should be approx. 15 amps. If heating element fails to operate, change the complete heating element assembly.

**Important. In the event of an over heat situation reset all thermal cutouts.**

**If hot water discharges from Tundish**

**WARNING**: Do not turn the mains water supply off - switch off (1) power to immersion heaters (Direct) or (2) shut down heating boiler (Indirect)

If hot water discharges from the tundish on indirect models there could be a fault with the thermal cut out, cylinder thermostat or temperature pressure relief valve. On a direct model the fault could lie with the heating element thermostat. We recommend you call your installer or Fabdec ltd.

## SPARES

When ordering replacement parts the serial number on the unit should be quoted.

## PART/COMPONENT REFERENCES

Expansion Vessel Kit (12 Litre) - 951923

Expansion Vessel Kit (18 Litre) - 951924

Expansion Vessel Kit (25 Litre) - 951925

Motorised Valve - 951878

Immersion Heater - 951860

Temp/pressure Relief Valve - 951858

Twin Thermostat - 951879

**WARNING:** Should the factory fitted temperature and pressure relief valve be tampered with your guarantee will be invalidated. Neither the distributor nor manufacturer shall be responsible for any consequential damage howsoever caused.

1845 Tech Manual.qxd 23/11/05 1:26 pm Page 12

# GUARANTEE

The **Excelsior** Duplex vessel carries a full 25-year cylinder guarantee against faulty materials or manufacture provided that:

- It has been correctly installed as per the Installation Manual and all the relevant regulations and codes of practice in force at the time.
- It has not been modified in any way, other than by Fabdec Ltd
- It has not been misused, tampered with or subjected to neglect
- It has only been used for the storage of potable water
- It has not been subject to frost damage
- The unit has been serviced annually
- The logbook has been filled in after each annual service
- Within 30 days of purchase the user completes and returns the certificate supplied to register the product.

Please note that invoices for servicing will be requested to prove that the unit was serviced annually

5 year guarantee available on all components except immersion heater and cylinder thermostat (Which carry a two year guarantee). However, this is subject to the Benchmark logbook having a regular service stamp by a qualified unvented installer.

**Exclusions – The guarantee does not cover: -**

- The effects of large scale build up
- Any labour charges associated with replacing the unit or outs parts
- Any consequential losses caused by the failure or malfunction of the unit

## GUIDANCE IN THE EVENT OF A PROBLEM

If you have a problem in the first instance contact the plumber who fitted the unit. There after contact the plumber who carries out the annual servicing for you.

If your **Excelsior** unit develops a leak we will supply you with a new one. We ask for a nominal up front payment to prevent fraud. We will require the original unit to be returned to us for inspection along with a copy of your logbook. When it is confirmed that it has failed within the terms of the warranty the up front payment will be refunded.

If a component fails within either the five or the two-year guarantee period we will send you a new one without any up front charge. Credit card details may be taken to prevent fraud. We ask you to post the faulty part back to us within one month by recorded delivery.

Due to our ongoing product development policy we reserve the right to alter specifications without prior notice.

# EXCELSIOR GUARANTEE REGISTRATION

**To be completed by the owner of the property**

By completing and returning this form we will register you as the owner of this Exelsior model.

These details, of your purchase and installation, will assist our ongoing product development, and enable us to deal with any queries you may have should you need to contact our Customer Service department in the future.

**Serial no. of the unit:** _____

**Date of Installation:** _____

**Users Name:** _____

**Address:** _____

_____

_____

**Telephone No.** _____

fabdec

*Design for living*

***Please indicate as appropriate.***

***1.*** Which Excelsior model have you installed?

_____

***2.*** Where in the property has the Excelsior unit been installed?

_____

***3.*** What source of central heating is used?

Oil ☐ Gas ☐ Electricity ☐ Solid Fuel ☐

***4.*** Which of the following best describes the type of Installation?

New Build ☐ Refurbishment ☐ Direct Replacement ☐

1845 Tech Manual.qxd 23/11/05 1:20 pm Page 1

**UK Head Office**
**Fabdec Ltd**
Grange Road Ellesmere
Shropshire SY12 9DG UK

Tel: + 44 (0) 1691 627200
Sales/Service Tel: + 44 (0) 1691 627210
Fax: + 44 (0) 1691 627222
Email: excelsior.sales@fabdec.com
Website: www.fabdec.com

AFFIX
STAMP
HERE

**Fabdec Ltd**
Grange Road
Ellesmere
Shropshire
SY12 9DG
UK